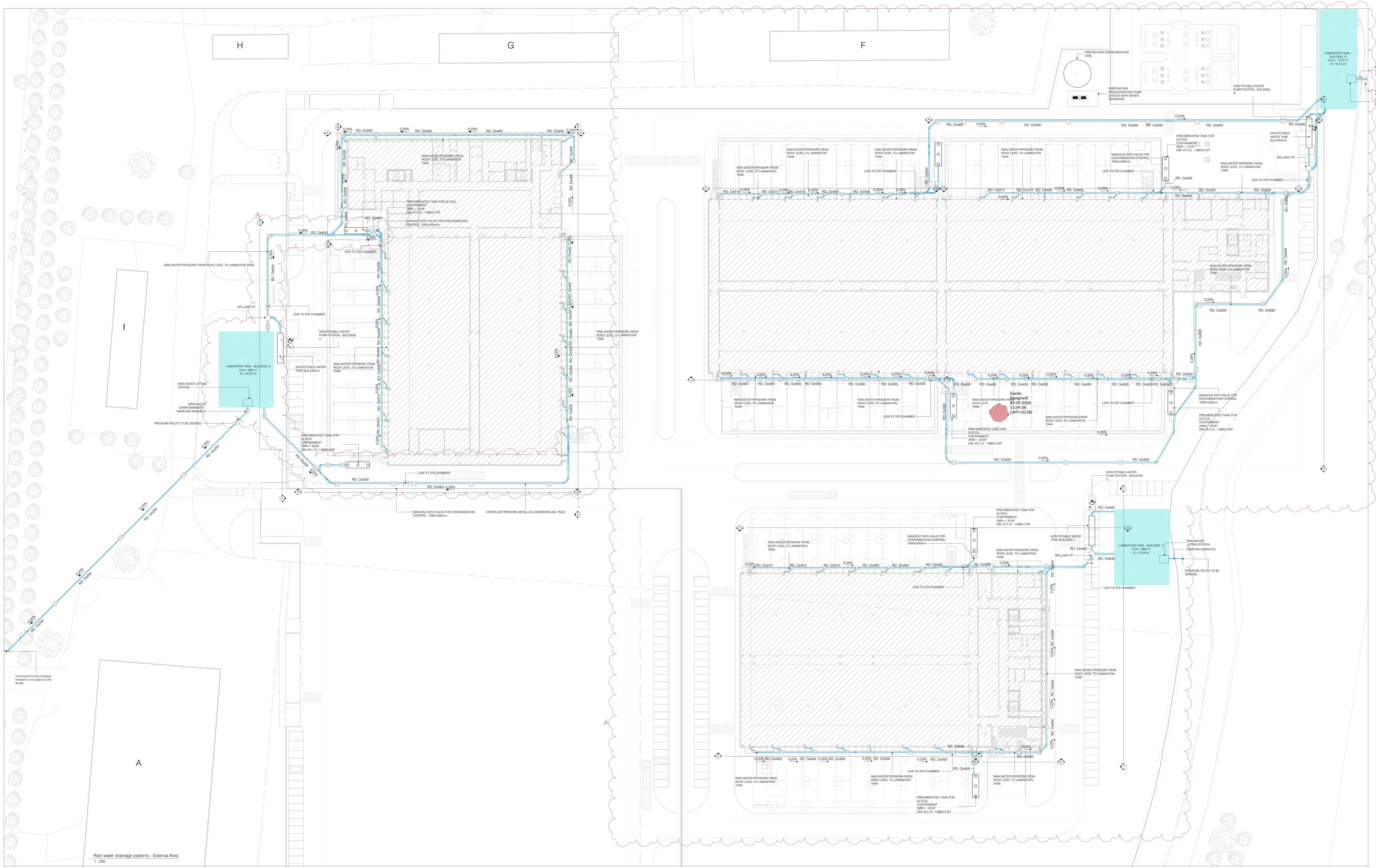
H
G
F
I
A
LAMINATION TANK - BUILDING A
Vmin= 965 m³
Q= 33,22 l/s
LAMINATION TANK - BUILDING B
Vmin= 1515 m³
Q= 52,12 l/s
LAMINATION TANK - BUILDING C
Vmin= 966 m³
Q= 33,25 l/s
RAIN WATER PIPEWORK FROM ROOF LEVEL TO LAMINATION TANK
SPILLWAY PIT
LEAF FILTER CHAMBER
NON POTABLE WATER PUMP STATION - BUILDING A
NON POTABLE WATER TANK BUILDING A
NON POTABLE WATER PUMP STATION - BUILDING B
NON POTABLE WATER TANK BUILDING B
NON POTABLE WATER PUMP STATION - BUILDING C
NON POTABLE WATER TANK BUILDING C
RAIN WATER LIFTING STATION
MANHOLE DI CAMPIONAMENTO - SAMPLING MANHOLE
MANHOLE DI CAMPIONAMENTO - SIMPLING MANHOLE
SAMPLING MANHOLE
PIPEWORK ROUTE TO BE DEFINED
PREFABRICATED TANK FOR GLYCOL CONTAINMENT VMIN = 23 M³ DIM. Ø 2,10 - 7,88X2,2 MT
MANHOLE WITH VALVE FOR CONTAMINATION CONTROL 1000x1000mm
OVERFLOW PIPEWORK INSTALLED UNDERGROUND, PEAD
FIREFIGHTING PRESSURIZATION TANK
FIREFIGHTING PRESSURIZATION PUMP STATION WITH WATER RESERVOIR
NON POTABLE WATER PUMP STATION - BUILDING B
RAIN WATER LIFTING STATION
Connection to the municipal network is not subject to this tender
RD: De250
RD: De315
RD: De400
RD: De500
RD: De630
0,25%
Danilo Ebalginelli
19.09.2024
11:49:38
GMT+02:00

Rain water drainage systems - External Area

1 : 350

Scarico acque meteoriche

Rain water drainage systems

RD	Scarico Acque Meteoriche *Rain Water*

PUBLIC HEALTH SERVICES NOTES:

- All drainage stacks to be equipped of inspectable trap, extended all the way to the roof and well ventilated.
- The condensing water collections shall be separated from the ones they flow into prior wet permanent trap or dry anti-odor trap interposition.
- The waste water collections shall be separated from the ones they flow into prior inspectable trap interposition.
- The rainwater collections shall be separated from soil waste water system up to drain pits that are located upstream of the public sewage inspection block.
- All drainage points collected below the intake quote of public sewage shall be merged into water collection tank equipped with electro-pumps.
- The testing operations shall be completed maintaining the drainage system visible and smooth.
- Providing inspection points for main drain pipe upstream of each connection, elbow or special fitting.
- All primary and secondary drainage pipework, unless accordingly indicated, must have the following minimum slopes:

Drainage branches to vertical stack	i=2%
Soil waste main drain pipe	i=1%
Rainwater/*Oil water*	i=0.25%

TYPICAL SECTION OF MAIN DRAIN PIPE ON DIFFERENT ELEVATIONS

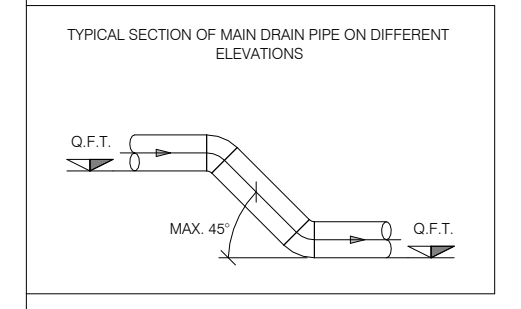
Q.F.T.
MAX. 45°
Q.F.T.

TYPICAL SECTION OF DRAINAGE BRANCHES TO MAIN DRAIN PIPE

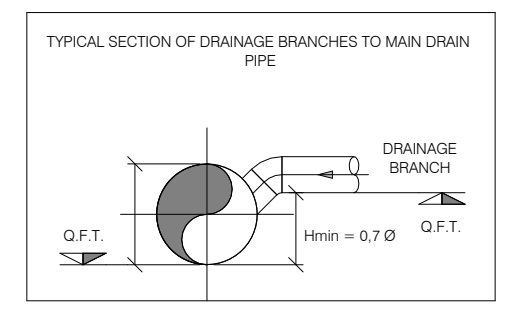
DRAINAGE BRANCH
Q.F.T.
Hmin = 0,7 Ø
Q.F.T.

TYPICAL SECTION OF CONNECTION BETWEEN PRESSURED DRAIN PIPE TO DRAINAGE SYSTEM

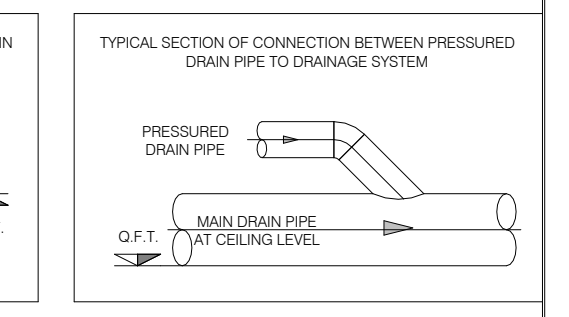
PRESSURED DRAIN PIPE
MAIN DRAIN PIPE AT CEILING LEVEL
Q.F.T.

GENERAL NOTES:

- The present drawing is valid for mechanical systems object of tender only.
- Every dimension and position of materials and equipment must be verified on site by the contractor, who must promptly give notice of possible interferences.
- Possible non surveyed systems shall be preserved; whereas needed, they shall be modified and their functioning reactivated by the contractor.
- Accurate positions of equipment, materials, piping, ducts, connections to existing systems shall be defined by the contractor and submitted to the works supervisor.
- Final sizing depending on actually installed equipment and materials manufacturer.
- All equipment shall be easily maintainable and accessible through access panels or similar solutions, including where not explicitly indicated.
- The contractor shall size and certify all supports in a workmanlike manner and in respect of every prescription regarding antiseismic design.
- Constructive detail drawings necessary to the correct execution of the works shall be drafted by the manufacturer.
- Installations of elements on site shall comply with every prescription and recommendation by the producers and by the highest trade standards in the relevant fields, including acoustics and fire prevention.
- Every work considered and described, evaluated based on available documentation, shall be reevaluated and analyzed during the construction phase, after system verification following adequate survey of the existing situation.
- The contractor shall accurately check the project and give notice of any inaccuracy, incompleteness o discrepancy with any code or law.
- In case of piping or duct material change, the same pressure drop of the design material shall be guaranteed.
- All construction and coordination drawings, along with all material sheets, shall be submitted to the works supervisor for approval.
- Every infrastructure needed to deliver functioning and testable systems shall be verified on site by the contractor.
-The bottom tube measurements refer to the project Zero Level

Manhole - Tag

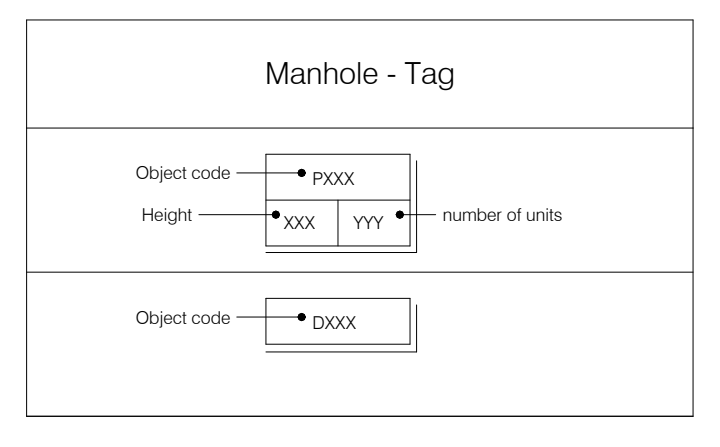
Object code
PXXX
Height
XXX
YYY
number of units
Object code
DXXX

Detain non potable water tank

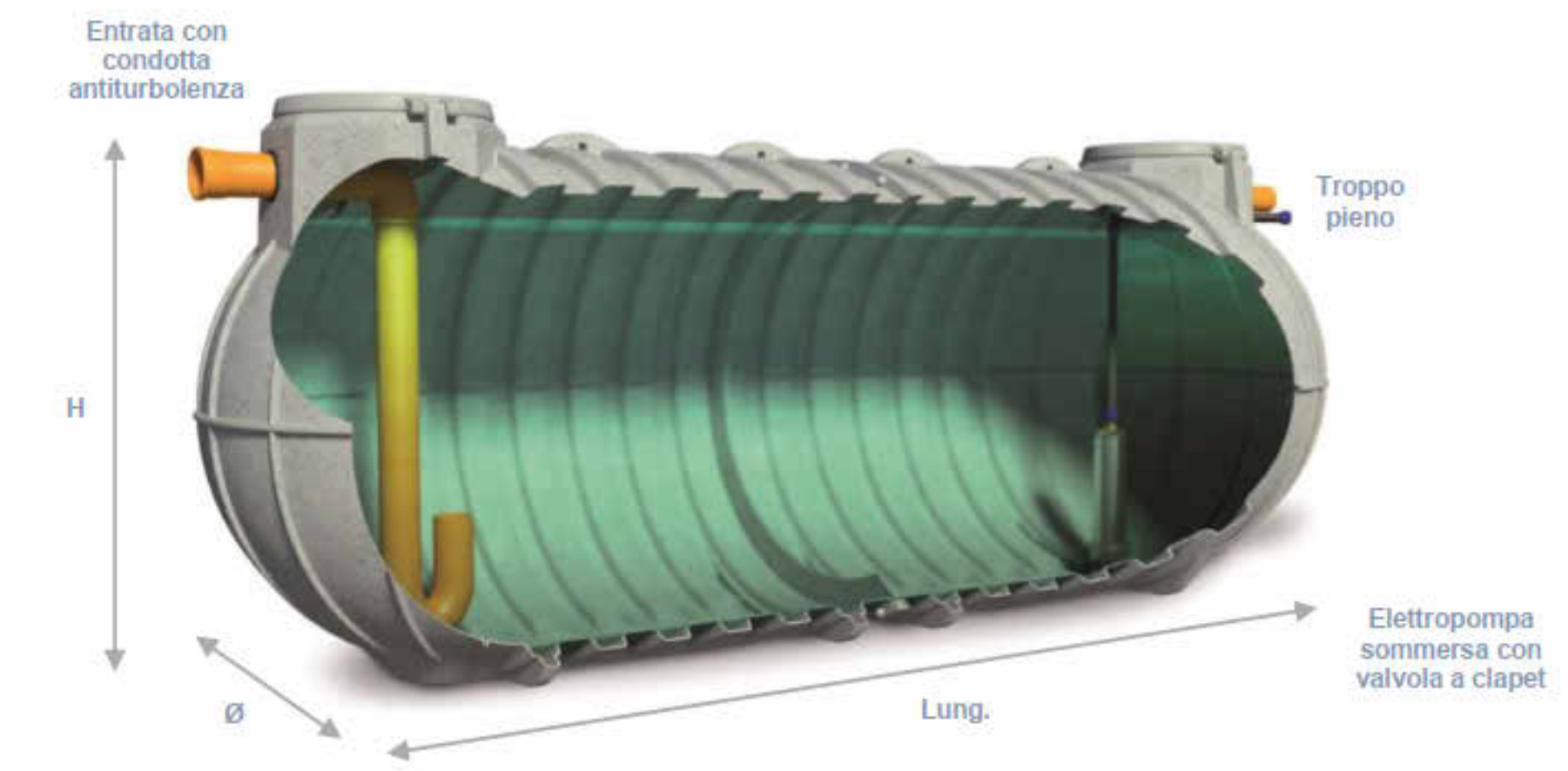
Entrata con condotta antiturbolenza
Troppo pieno
H
Ø
Lung.
Elettropompa sommersa con valvola a clapet

** n. 1 saldatura da effettuare in cantiere da parte di personale qualificato Rototec

Articolo	Volume (lt)	Lung. (mt)	Ø (mt)	H (mt)	Ø E/U (mm)	Ø troppo pieno (mm)	Ispezioni standard (mm)	Prolunga	Pompa
ITSIR45015	45150	14,66	2,10	2,20	125-50	125	2 x 630	PP77	2 x PI80/20

Articolo	Ø (mm)	H (mm)	Ø tappo (mm)
PP 77	750	430	630

PROLUNGA MODULARE (OPZIONALE)

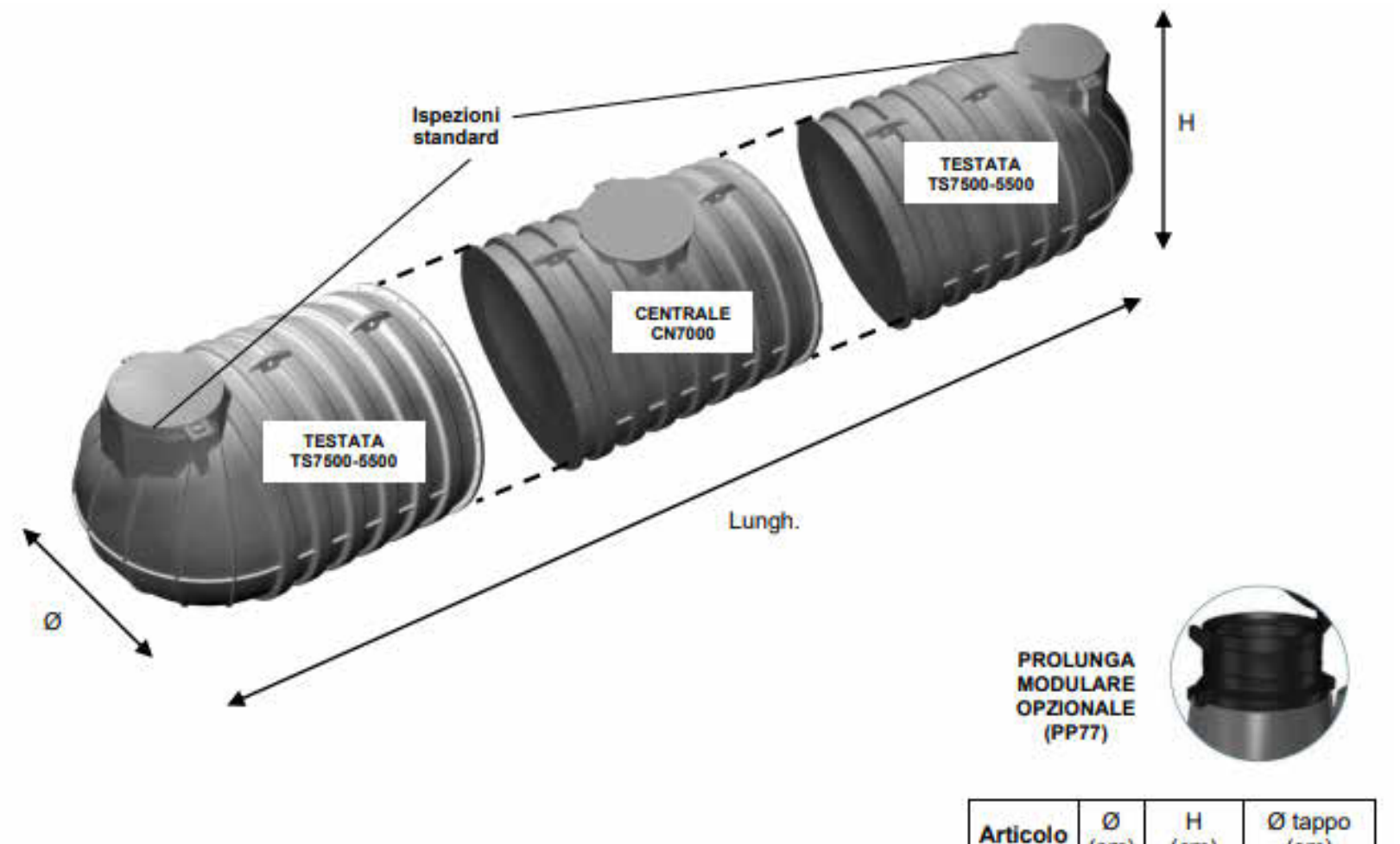
Ispezioni standard
TESTATA TS7500-5500
CENTRALE CN7000
TESTATA TS7500-5500
H
Ø
Lungh.
PROLUNGA MODULARE OPZIONALE (PP77)

Articolo	Ø (cm)	H (cm)	Ø tappo (cm)
PP 77	75	43	63

IT22000	23100	2,10	7,88	2,20	2	2 TS7500 + 1 CN7000

Detail of glycol containment tank for underground installation

1 : 100

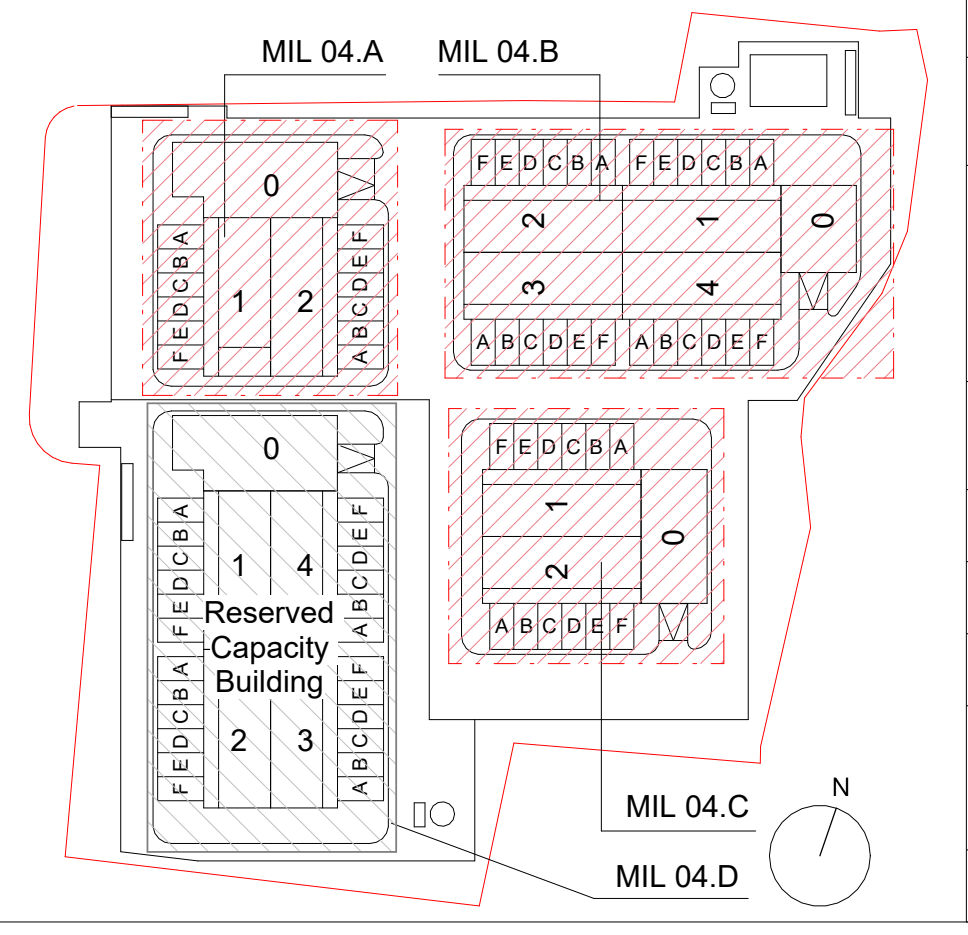
MIL 04.A
MIL 04.B
F E D C B A
0
1
2
3
4
Reserved Capacity Building
MIL 04.C
MIL 04.D
N

REV	DATA / DATE:	DESCRIZIONE / DESCRIPTION:
-	31/08/2023	First Emission
a	27/10/2023	Revision a

PROGETTISTA / DESIGNER:

L22 è una divisione di:
Lombardini22 S.p.A.
Via Lombardini 22 20143 Milano, Italia
T +39 02 36 59 62 00 F +39 02 83 20 13 97
info@l22.it www.l22.it

Black & White Engineering:
69 Wilson Street London, EC2A 2BB
United Kingdom
www.bw-engineering.com

STRUTTURE:

Studio Progetti Strutturali
Ing. Arturo Donadio
S.P.S. S.r.l. www.spssrl-mi.it
Via M. Gioia, 64 - 20125 Milano, Italia
segreteria@spssrl-mi.it T. 02/6694887

COMMITTENTE / CLIENT:

INFRASTRUCTURE ITALIA LAND 4 S.r.l.
Via del Bosco Rinnovato, 6 Palazzo U4 20090 Assago (MI)

PROGETTO / PROJECT:
MIL 04
Alzaia Naviglio Pavese snc,
Vellezzo Bellini (PV)

PROGETTISTA / DESIGNER:
Ing. Roberto Cereda - Iscritto all'Ordine degli Ing. di Brescia n°N.2609

OGGETTO / OBJECT:
RIBA4 - MIL 04

TITOLO / DESCRIPTION:
Mechanical Systems
Rain water drainage systems
External Area - Aree esterne
Scarico acque meteoriche

DISEGNATO DA: DRAWN BY:	CONTROLLATO DA: CHECKED BY:
APT	MIC
DATA/ DATE: 31/08/2023	SCALA / SCALE: 1:350

NOME FILE / FILE NAME:
3604_EM-5201aG

COMMESSA / JOB:	FORMATO / SHEET:
3604	A0+++

TAVOLA / DRAWING:
EM-5201

DATA REV.:	REV.:
27/10/2023	a

© Lombardini22 S.p.A. ES DT (rev.-) (L.663/41 Art.2575)